Innovative Train Technology Products
ITTP
P.O. Box 5042 West Hills, CA 91308
(818) 926-1143
Email: george@ittproducts.com
Visit http://www.ittproducts.com

Year 2010 Series HQ Sound Module Instructions

5/14/10

Use caution when handling bare electronic circuits. Todays micro circuitry can be damaged by ESD.

ESD means Electro Static Discharge. This is what occurs when you walk across a carpet and touch a piece of metal and get a shock. Before touching the circuit board, you should touch something that is grounded to discharge any static electricity you may be storing. Some soldering to switches and speaker will be required. We recommend using 20 to 24 gage solid or stranded insulated wire.

Modules can be placed under layouts, in buildings, or onboard trains.

Maximum recorded time is 60 seconds depending on the scenario on your module.
For outdoor use, circuit board should be protected from the elements. You can seal them in boxes, zip lock bags, and place in buildings. Try to avoid exposure to moisture.

Warranty: 90 days

Note: Each module requires its own speaker

Typical Applications

Be Careful not to mount circuit board on a conductive surface such as metal. Circuit damage will result.

Track side operation around the layout

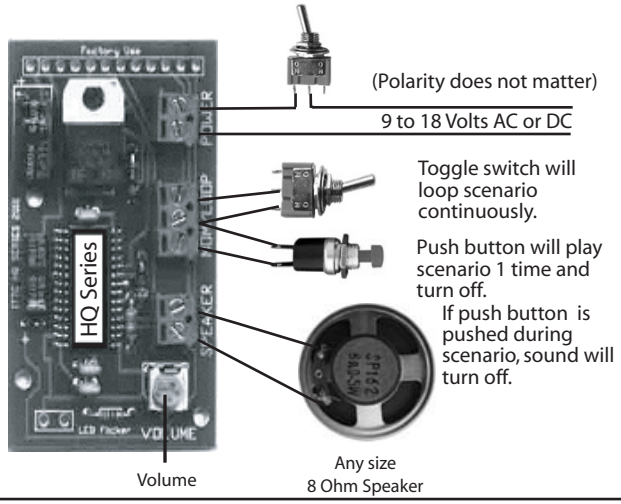

Looping trackside or onboard using a battery or AC/DC power.

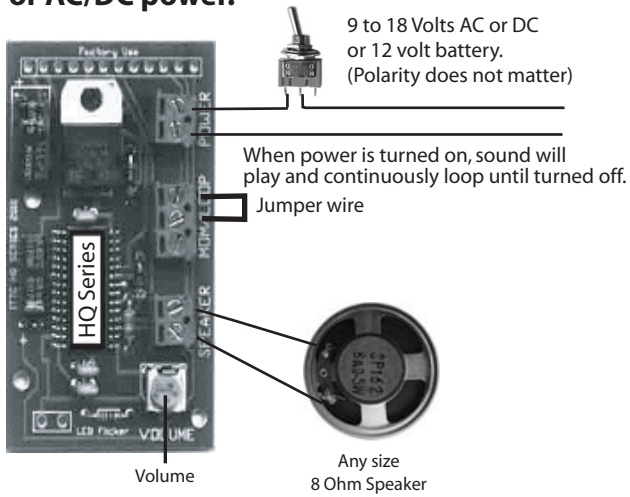

Onboard with variable track voltage

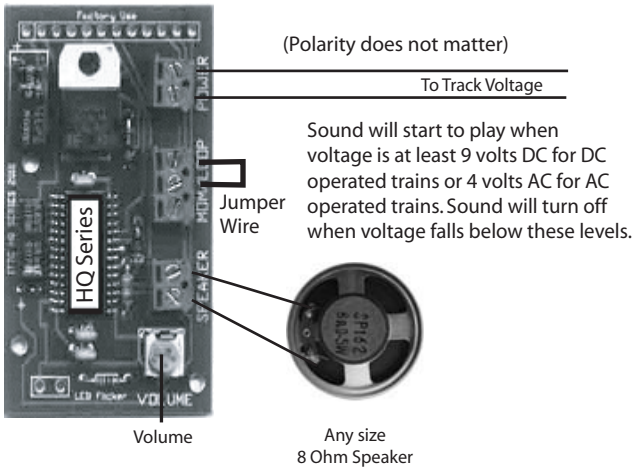

DCC operation - Onboard or Trackside

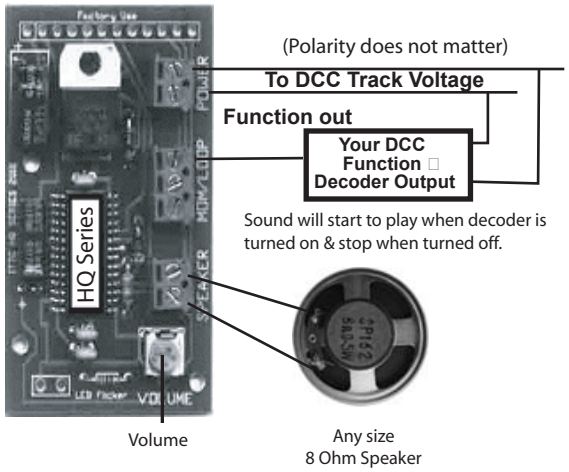

Magnetic Sensor Operation

Magnetic Switch Normally Open

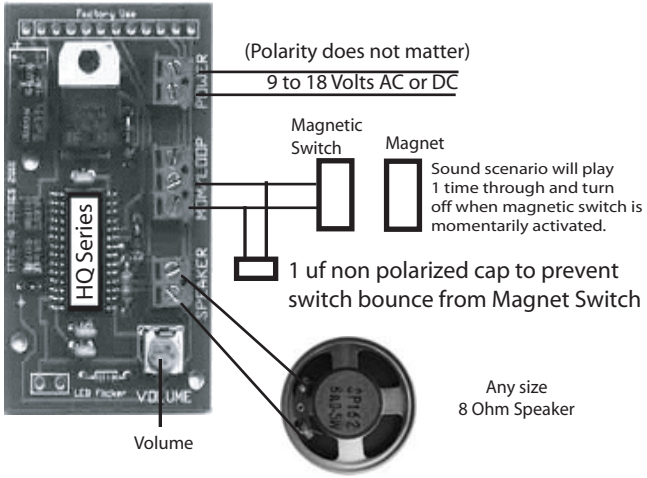
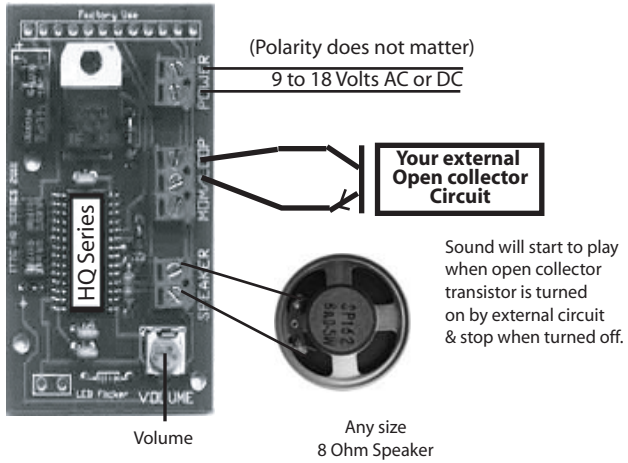
External Circuit Activation with open collector transistor.